COMSOL MULTIPHYSICS®

Microchannel Heat Sink

SOLVED WITH COMSOL MULTIPHYSICS 3.5a

© COPYRIGHT 2008. All right reserved. No part of this documentation may be photocopied or reproduced in any form without prior written consent from COMSOL AB. COMSOL, COMSOL Multiphysics, COMSOL Reaction Engineering Lab, and FEMLAB are registered trademarks of COMSOL AB. Other product or brand names are trademarks or registered trademarks of their respective holders.

COMSOL

Microchannel Heat Sink

Introduction

This example models a microchannel heat sink mounted on an active electronic component. The model geometry is based on a paper by B.C. Pal and others (Ref. 1) as well as another from S.P. Jang and others (Ref. 2).

Thermal management has become a critical aspect of today's electronic systems, which often include many high-performance circuits that dissipate large amounts of heat. Many of these components require efficient cooling to prevent overheating. Some of these components, such as processors, require a heat sink with cooling fins that are exposed to forced air from a fan. This discussion develops the model of an aluminum microchannel heat sink whose manifolds work as flow dividers to improve its cooling performance (see Figure 1).

This case examines the temperature field in the air, in the aluminum, and in the heat source. The air transports heat by convection and conduction. Because the geometry is fairly complicated, it is not possible to use an analytical expression for the velocity profile, so you must also model the fluid flow and couple it to the heat equation. The aluminum heat sink transports thermal energy by pure conduction. Finally, to approximate the electronic component that requires cooling, the model uses a rectangular block with a given volume heat source.

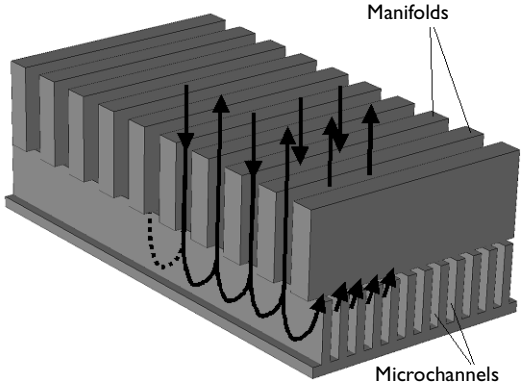

Figure 1: Microchannel heat sink with manifolds.

Model Definition

The model geometry consists of three subdomains: the electronic component, the aluminum heat sink, and the cooling air. Because of symmetry, it is sufficient to model just a small element of the entire geometry as shown in Figure 2.

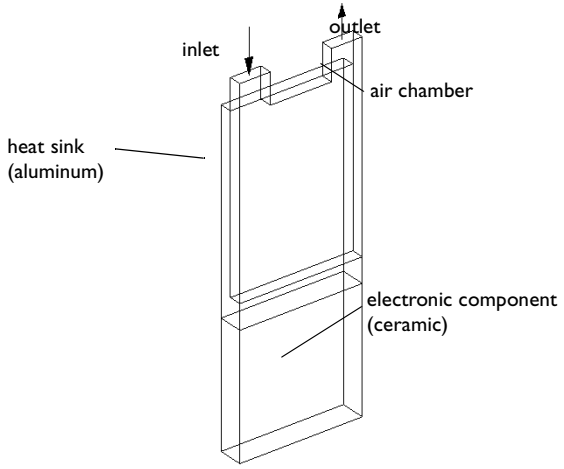

Figure 2: Symmetry element for modeling the heat sink and the heat source.

In particular, the surfaces labeled “inlet” and “outlet” in the figure each constitutes a quarter of the actual inlet and outlet, respectively.

This simulation employs the General Heat Transfer and the Weakly Compressible Navier-Stokes application modes for stationary analysis. The first mode models the temperature field in the entire geometry; the second one serves only to model the airflow.

Both the component and the heat sink transport heat by pure conduction as described by the conductive heat equation

$$\nabla \cdot (-k\nabla T) = Q$$

where k (W/(m·K)) is the thermal conductivity, Q (W/m^3) is the heat source, and T (K) denotes the temperature. The model’s heat source relates to the component’s output power, and Q equals zero for the heat sink because that device has no heat sources.

The temperature field in the air is governed by the heat equation for conduction and convection

$$\rho C_p \mathbf{u} \cdot \nabla T - \nabla \cdot (k \nabla T) = 0$$

where k refers to the thermal conductivity (W/(m·K)), ρ is the density (kg/m^3) and C_p denotes the specific heat capacity (J/(kg·K)) for air. You obtain the velocity vector $\mathbf{u}$ (m/s) from the equations for the airflow as described later in this section.

The boundary conditions for the heat-transfer equations are:

$$T = T_{\text{in}} \qquad \text{at the inlet,}$$

$$\mathbf{n} \cdot (-k \nabla T) = 0 \qquad \text{elsewhere.}$$

The last equation applies equally well at thermally insulated boundaries and at boundaries through which no heat flows because of symmetry. In addition, assume heat-flux continuity on all interior boundaries.

Now use the Weakly Compressible Navier-Stokes equations for the momentum equations and the equation of continuity to describe the air's velocity and pressure field:

$$\rho \mathbf{u} \cdot \nabla \mathbf{u} = \nabla \cdot [-p\mathbf{I} + \eta (\nabla \mathbf{u} + (\nabla \mathbf{u})^T) - (2\eta/3)(\nabla \cdot \mathbf{u})\mathbf{I}] + \mathbf{F} \qquad \text{in the air}$$
$$\nabla \cdot (\rho \mathbf{u}) = 0$$

where η denotes the dynamic viscosity (Pa·s), $\mathbf{u}$ is the velocity (m/s), ρ is the fluid density (kg/m^3), p represents pressure (Pa), and $\mathbf{F}$ is the volume force (N/m^3).

The air density depends on the pressure and temperature according to the ideal gas equation

$$\rho = \frac{p}{RT}$$

where R is the mass-based gas constant, equal to 287 J/(kg·K) for air.

You can assume that the volume force, $\mathbf{F}$, is zero because gravitational forces due to changes in density most likely have very little impact on this model.

At the inlet, the fluid enters with a parabolic velocity profile modeling fully developed laminar flow. The mean velocity is approximately 1 m/s, and the air temperature is 293 K. At the outlet the pressure is 10^5 Pa, and heat leaves through convection.

These assumptions lead to the following boundary conditions for the Weakly Compressible Navier-Stokes application mode:

$\mathbf{u} = 0$	at walls
$\mathbf{n} \cdot \mathbf{u} = 0$	at symmetry boundaries
$p = p_0, \quad [\eta\,(\nabla\mathbf{u} + (\nabla\mathbf{u})^T) - (2\eta/3)(\nabla \cdot \mathbf{u})\mathbf{I}]\mathbf{n} = 0$	at the outlet
$\mathbf{u} = (0, 0, w)$	at the inlet

Here, the outlet pressure equals $p_0 = 1.0 \cdot 10^5$ Pa, and the z-component of the inlet velocity is

$$w = -0.3 \cdot 10^{16}(2.5 \cdot 10^{-4} + x)(2.5 \cdot 10^{-4} - x)(1 \cdot 10^{-4} + y)(1 \cdot 10^{-4} - y) \text{ m/s}$$

with x and y expressed in meters. The prefactor is calculated to give an average inflow speed of 1 m/s at the rectangular inlet surface measuring $5 \cdot 10^{-4}$ m $\times$ $2 \cdot 10^{-4}$ m and centered at $x = 0, y = 0$. The model geometry covers only the part where $x \geq 0, y \geq 0$.

Adding Thermal Contact Resistance

The model described thus far assumes perfect thermal contact at the interface between the heat source and the aluminum heat sink. A more realistic model accounts for the interface's thermal contact resistance. That resistance is an important factor in the design of electronics cooling because it can significantly reduce a heat sink's cooling performance. The following discussion describes how to account for the thermal contact resistance, starting from the initial model.

The analysis is based partly on reference Ref. 3, which presents an analysis of how to calculate the interface resistance for a ceramic package/aluminum heat-sink assembly.

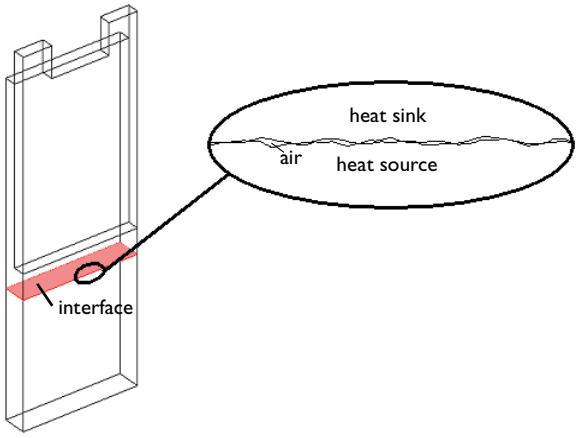

Figure 3: The interface between the heat source and the heat sink.

Figure 3 shows the interface between the heat source and the heat sink. The surfaces of the heat sink and the ceramic heat source are not in perfect contact because of their roughness; air fills the gaps between the surfaces.

Modeling the interface with the geometry of the rough surfaces would require a very dense mesh. An alternative, more practical, way of modeling the interface is to define a thermal joint conductivity, h_j (W/(m^2·K)), that is representative for the interface.

Using the thermal joint conductivity, the heat flux from the heat source to the heat sink is

$$q_{\text{source} \rightarrow \text{ sink}} = h_j(T_{\text{source}} - T_{\text{sink}}) \tag{1}$$

where T_{sink} is the temperature of the aluminum heat sink at the interface, and T_{source} is the temperature of the ceramic heat source at the interface. Equation 1 states that the difference in temperature across the interface drives the heat flux.

Similarly, the heat flux from the heat sink to the heat source is

$$q_{\text{sink} \rightarrow \text{ source}} = h_j(T_{\text{sink}} - T_{\text{source}}) \tag{2}$$

Note that $q_{\text{sink} \rightarrow \text{ source}}$ has a negative value as long as the source temperature is higher than the sink temperature.

These two heat-flux conditions maintain heat flux continuity through the interface, that is, the heat flux out of the heat source equals the heat flux into the heat sink.

Ref. 3 shows how to calculate the thermal joint conductivity of an interface that is similar to the one in this model; here follows a brief summary.

The thermal joint conductivity, h_j, is defined as the sum of the conductivity through those regions that are in contact and those where there is a gap,

$$h_j = h_c + h_g \tag{3}$$

where h_c is the contact conductivity and h_g is the gap conductivity, both measured in $W/(m^2 \cdot K)$. The contact conductivity is determined by the expression

$$h_c = 1.25 k_s \frac{m}{\sigma}\left(\frac{P}{H_c}\right)^{0.95} \tag{4}$$

where k_s, m, σ, and H_c are parameters specifying the material and surface characteristics of the surfaces, and P is the contact pressure.

The gap conductance is

$$h_g = \frac{k_g}{Y + M} \tag{5}$$

where k_g is the thermal conductivity of the air in the gap, Y is the effective gap thickness, and M is a gas parameter that accounts for rarefaction effects at high temperatures and low pressures.

For this model you apply the value $h_j = 5400\ W/(m^2 \cdot K)$. For more details on how to compute these properties according to Equation 3, Equation 4, and Equation 5, see Ref. 3.

In COMSOL Multiphysics you model thermal contact resistance by applying the Thin thermally resistive layer boundary condition:

$$\begin{aligned} -\mathbf{n}_u \cdot (-k_u \nabla T_u) &= \frac{k_{res}}{d_{res}}(T_d - T_u) \\ -\mathbf{n}_d \cdot (-k_d \nabla T_d) &= \frac{k_{res}}{d_{res}}(T_u - T_d) \end{aligned} \tag{6}$$

This boundary condition, known as a *slit boundary condition*, can accommodate a discontinuity in the temperature field across the boundary. The parameters of the

boundary condition are the layer thermal conductivity k_{res}, and layer thickness d_{res}. For this model, we only know the factor k_{res}/d_{res}, which is equal to our thermal joint conductivity h_j. We can specify the correct thermal joint conductivity by applying the values $k_{res} = h_j \cdot 1.0$ m and $d_{res} = 1.0$ m.

Slit boundary conditions are only available on assembly pair boundaries, which requires us to set up an assembly geometry to model contact resistance.

Results and Discussion

Figure 4 shows the resulting temperature field for the initial model. It indicates that this scheme holds the component's temperature at roughly 337 K. The air temperature increases from 295 K to approximately 337 K on its way from the inlet to the outlet, something you could expect because the air absorbs heat energy from the aluminum. The figure also shows streamlines for the total heat flux. The streamlines show that the heat energy leaves the aluminum and escapes through the outlet.

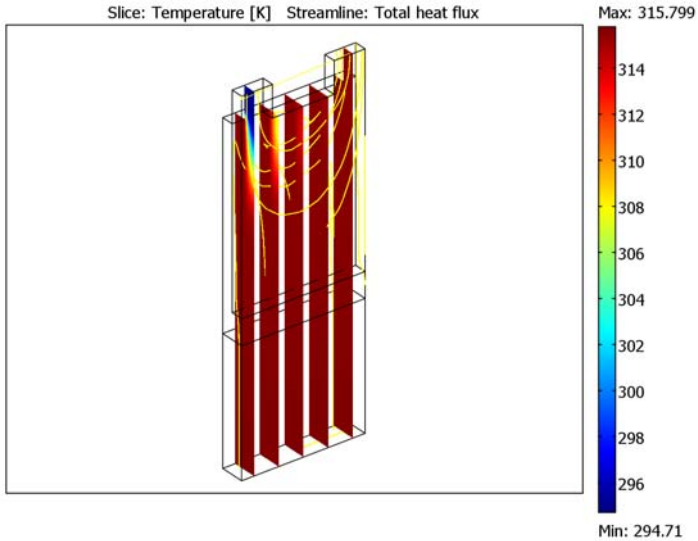

Figure 4: Temperature field and heat-flux streamlines.

The velocity field and its streamlines appear in Figure 5. Again, as expected, the velocities are highest at the inlet and outlet.

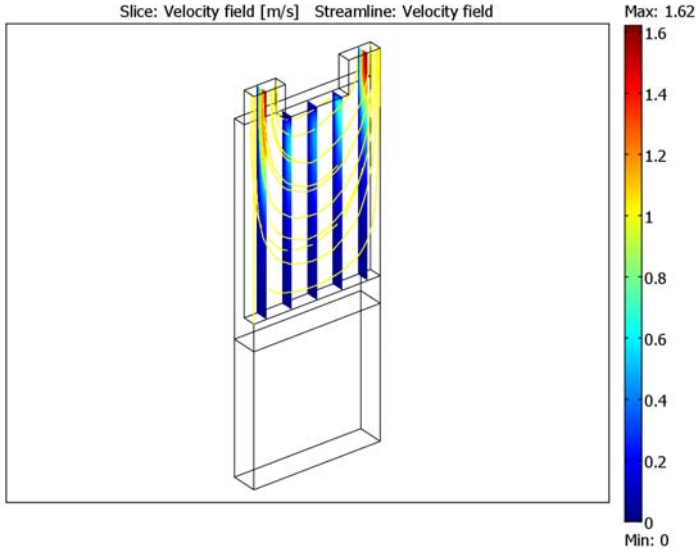

Figure 5: Velocity field with velocity streamlines.

Figure 6 shows the temperature field of the extended model, which accounts for the thermal contact resistance of the interface between the heat source and sink. A small temperature jump is observed on the interface. The maximum temperature of the component is roughly 1 K higher than the result obtained with the initial model. This confirms that the interface's thermal contact resistance does have an impact on the heat sink's cooling performance, albeit a small one.

Most importantly, the results show that the electronic component does not overheat when operating continuously at the given power.

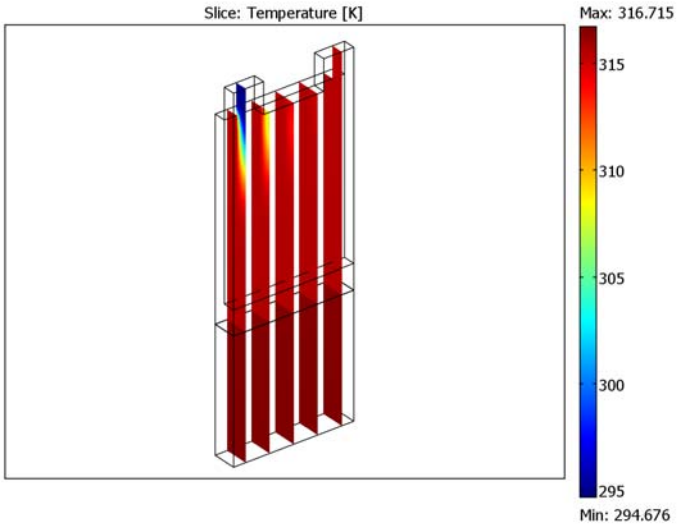

Figure 6: Temperature field when accounting for the thermal contact resistance.

References

1. B.C. Pak, W.C. Chun, and B.J. Baek, "Forced Air Cooling by Manifold Microchannel Heat Sinks," EEP, vol. 19.2, *Advances in Electronic Packaging*, ASME, 1997.

2. S.P. Jang, S.J. Kim, and K.W. Paik, "Experimental investigation of thermal characteristics for a microchannel heat sink subject to an impinging jet, using a micro-thermal sensor array," *Sensors and Actuators A*, vol. 105, pp. 211–224, 2003.

3. M.M. Yovanovich, J.R. Culham, and P. Teertstra, "Calculating Interface Resistance," *Electronics Cooling*, May, 1997 (http://electronics-cooling.com/articles/1997/may/article3.php)